Product number: IN-2570

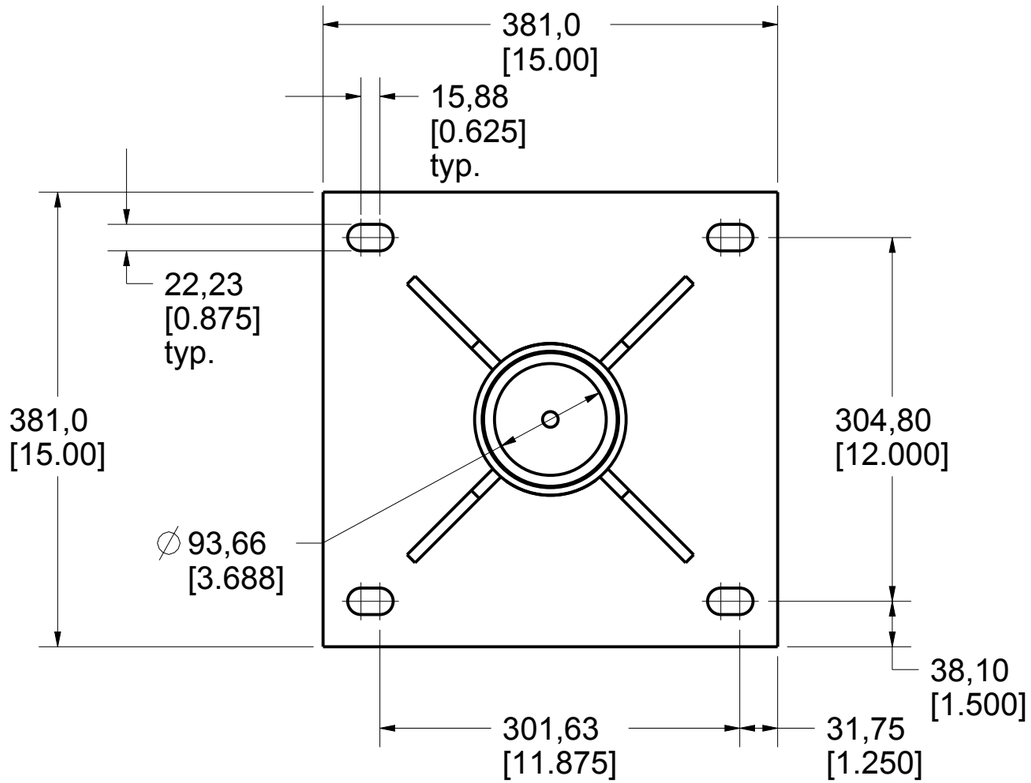

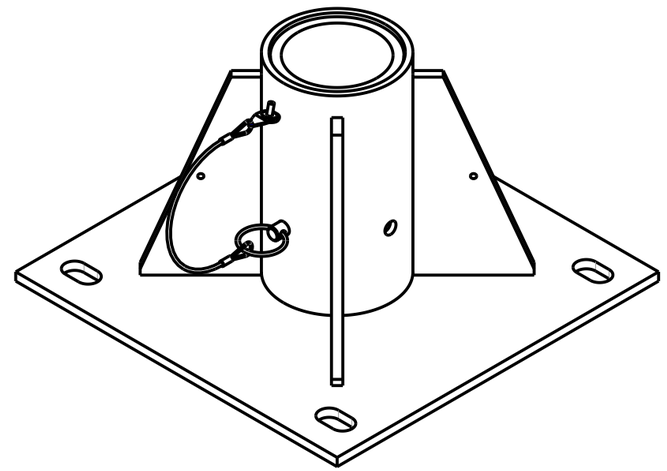

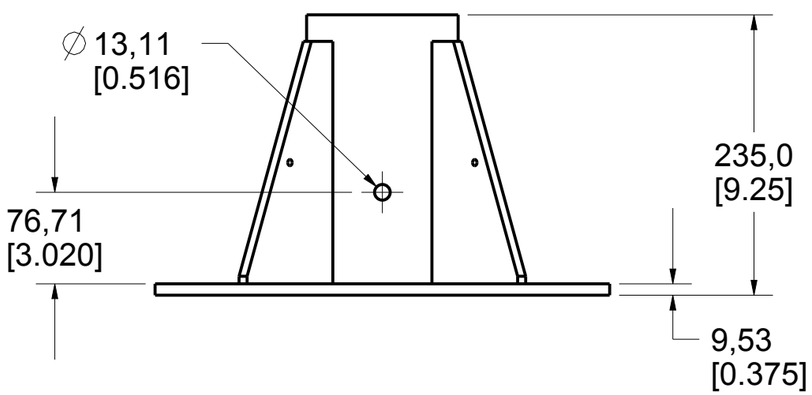

PAT.NO.:

INGÉNIEUR · ENGINEER
Michael Parker
2023-12-21
102051
QUÉBEC

PRODUITS DE SERVICE PUBLICS INNOVA INC.
INNOVA PUBLIC UTILITY PRODUCTS INC.

© 9105-0732 QUEBEC INC. and under exclusive license to INNOVA PUBLIC UTILITY PRODUCTS INC., (hereafter « INNOVA »). All rights reserved. Protected under the Copyright Act of Canada and international treaties and agreements regarding copyrights. Violators are subject to prosecution and other legal recourses for infringement. Any reproduction, adaptation or other use or disclosure whatsoever, in totality or in part, and in any form or by any means whatsoever, strictly forbidden and requires the prior written approval of INNOVA. All data is the exclusive property of 9105-0732 QUEBEC INC. and under exclusive license to INNOVA and cannot be used nor disclosed in any way either without the prior written approval of INNOVA».

WEIGHT:

45.0 Lb

20.4 Kg

TITLE:

Floor Adapter for Universal Anchor Post

COLOR:	Material:	SHEET(S):	PROJET:	Rev.
	SS 304	1 / 5	IN-2570	04

Base Installation Requirements

Product number: IN-2570

Full Thickness Installation

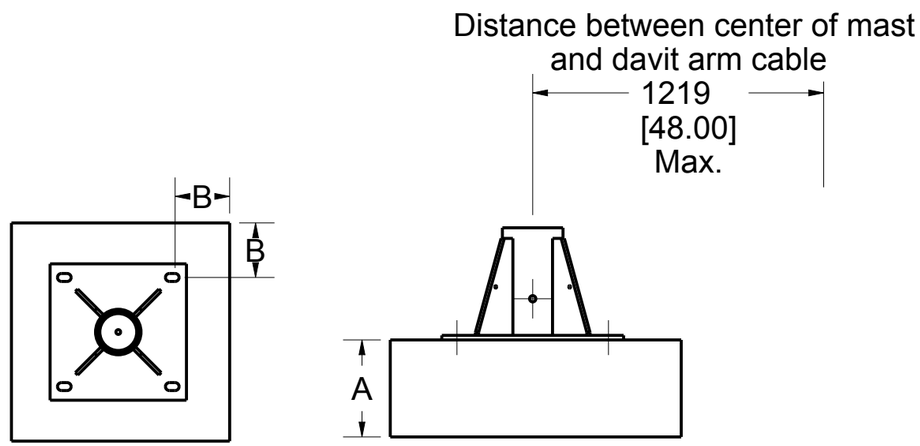

Sandwich Installation

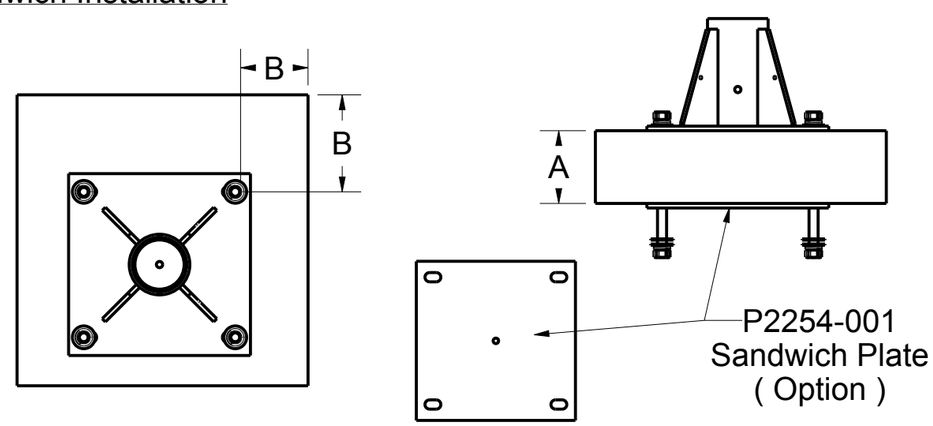

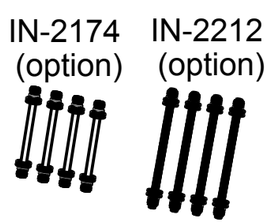

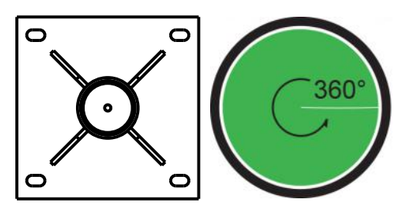

Permissible Working Angle

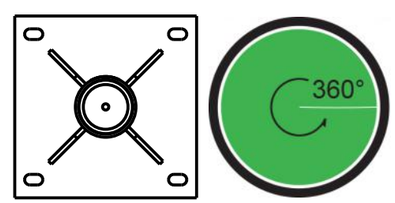

Permissible Angle of Recuperation

ANSI, AS / NZS, CSA, OSHA

	Full thickness	Example *	Sandwich	Example *
Minimum thickness (A)	Refer to fastener manufacturer specifications	203 mm (8.00")	To be determined by the local engineer	152 mm (6.00")
Minimum edge distance (B)	Refer to fastener manufacturer specifications	152 mm (6.00")	To be determined by the local engineer	152 mm (6.00")
Embedment depth	Refer to fastener manufacturer specifications	152 mm (6.00")	N / A	N / A
Minimum pullout strength per fastener	43,1 kN (9 689 lbf)	43,1 kN (9 689 lbf)	43,1 kN (9 689 lbf)	43,1 kN (9 689 lbf)
Maximum moment applied to the structure	30,1 kN•m (266 407 lbf•in)	30,1 kN•m (266 407 lbf•in)	30,1 kN•m (266 407 lbf•in)	30,1 kN•m (266 407 lbf•in)
Maximum vertical load applied to the structure	22,3 kN (5 000 lbf)	22,3 kN (5 000 lbf)	22,3 kN (5 000 lbf)	22,3 kN (5 000 lbf)

Note:
1. It is the responsibility of the local engineer to assure installation compliance.
2. To be installed with 3/4" (M20) minimum ∅ stainless steel anchors. Smaller anchors must be validated by the local engineer.
3. All other variation must be approved by the local engineer.
4. *Typical installation concrete for 21 MPa (3000 psi) and 0.2% gross area rebar reinforcement.
5. Tolerance of flatness around adapter contour and wall shall not exceed 3/8" (9,5mm).

PAT.NO.:

INGÉNIEUR · ENGINEER
Michael Parker
2023-12-21
102051
QUÉBEC

PRODUITS DE SERVICE PUBLICS INNOVA INC.
INNOVA PUBLIC UTILITY PRODUCTS INC.

© 9105-0732 QUEBEC INC. and under exclusive license to INNOVA PUBLIC UTILITY PRODUCTS INC., (hereafter « INNOVA »). All rights reserved. Protected under the Copyright Act of Canada and international treaties and agreements regarding copyrights. Violators are subject to prosecution and other legal recourses for infringement. Any reproduction, adaptation or other use or disclosure whatsoever, in totality or in part, and in any form or by any means whatsoever, strictly forbidden and requires the prior written approval of INNOVA. All data is the exclusive property of 9105-0732 QUEBEC INC. and under exclusive license to INNOVA and cannot be used nor disclosed in any way either without the prior written approval of INNOVA».

WEIGHT:
45.0 Lb
20.4 Kg

TITLE:
Floor Adapter for Universal Anchor Post

COLOR:	Material:	SHEET(S):	PROJET:	Rev.
	SS 304	2 / 5	IN-2570	04

Base Installation Requirements

Product number: IN-2570

Full Thickness Installation

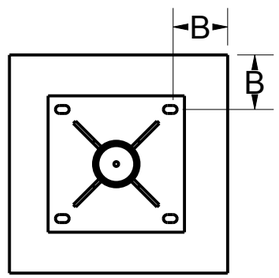

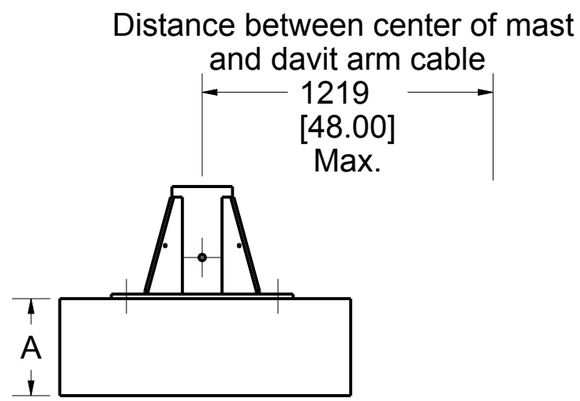

Sandwich Installation

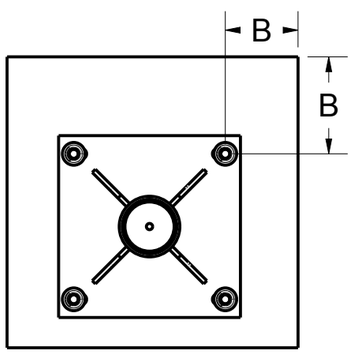

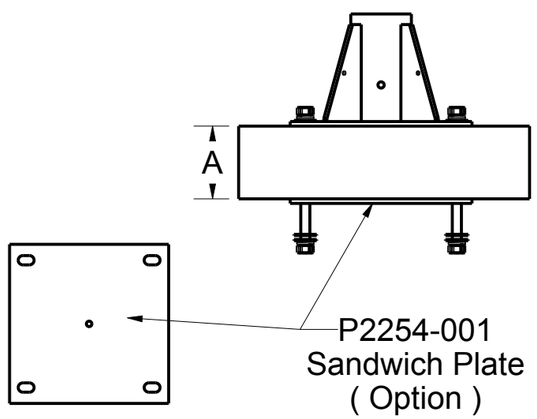

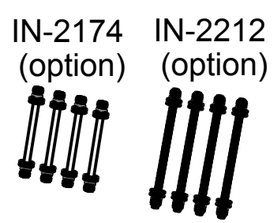

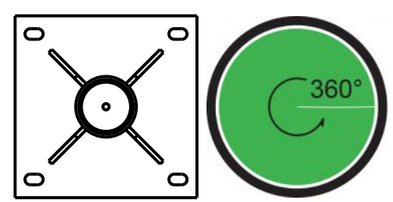

Permissible Working Angle

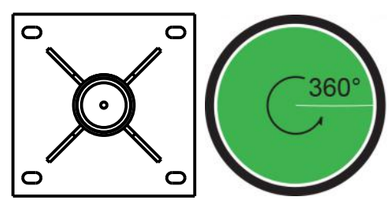

Permissible Angle of Recuperation

EN 795, TS16415		
	Full thickness	Sandwich
Minimum thickness (A)	Refer to fastener manufacturer specifications	To be determined by the local engineer
Minimum edge distance (B)	Refer to fastener manufacturer specifications	To be determined by the local engineer
Embedment depth	Refer to fastener manufacturer specifications	N / A
Minimum pullout strength per fastener	41,0 kN (9 217 lbf)	41,0 kN (9 217 lbf)
Maximum moment applied to the structure	28,7 kN•m (254 016 lbf•in)	28,7 kN•m (254 016 lbf•in)
Maximum vertical load applied to the structure	14,0 kN (3 147 lbf)	14,0 kN (3 147 lbf)

Note:
1. It is the responsibility of the local engineer to assure installation compliance.
2. To be installed with 3/4" (M20) minimum ∅ stainless steel anchors.
   Smaller anchors must be validated by the local engineer.
3. All other variation must be approved by the local engineer.
4. Tolerance of flatness around adapter contour and wall shall not exceed 3/8" (9,5mm).

PAT.NO.:

INGÉNIEUR · ENGINEER
Michael Parker
2023-12-21
102051
QUÉBEC

PRODUITS DE SERVICE PUBLICS INNOVA INC.
INNOVA PUBLIC UTILITY PRODUCTS INC.

© 9105-0732 QUEBEC INC. and under exclusive license to INNOVA PUBLIC UTILITY PRODUCTS INC., (hereafter « INNOVA »). All rights reserved. Protected under the Copyright Act of Canada and international treaties and agreements regarding copyrights. Violators are subject to prosecution and other legal recourses for infringement. Any reproduction, adaptation or other use or disclosure whatsoever, in totality or in part, and in any form or by any means whatsoever, strictly forbidden and requires the prior written approval of INNOVA. All data is the exclusive property of 9105-0732 QUEBEC INC. and under exclusive license to INNOVA and cannot be used nor disclosed in any way either without the prior written approval of INNOVA».

WEIGHT:
45.0 Lb
20.4 Kg

TITLE:
Floor Adapter for Universal Anchor Post

COLOR:	Material:	SHEET(S):	PROJET:	Rev.
	SS 304	3 / 5	IN-2570	04

Product number: IN-2570

SPECIFICATIONS

This equipment is considered as part of a personal fall arrest system (PFAS).

It is only to be used in conjunction with a horizontal life line or as an anchor point system that limits the maximum arrest force (MAF) to 6,0 kN / person.

Working Load Limit (WLL) :	164 kg / User	(360 lb) / User
Maximum Working Moment (MWM) :	2,1 kN•m	(18 293 lbf•in)
Horizontal Minimum Breaking Strength :	29,3 kN	(6 596 lbf)
Vertical Minimum Breaking Strength :	18,0 kN	(4 407 lbf)
Maximum Design Moment :	30,0 kN•m	(265 906 lbf•in)

STANDARDS

Name	Classification	Year	Users
AS/NZS 5532	Freefall arrest	2013	2
ANSI Z359.18	D	2017	2
CSA Z259.15	AD	2017	2
OSHA 1910.140			2
OSHA 1926.502			2
EN 795	A	2012	1
TS 16415		2013	3

MATERIAL AND CONSTRUCTION

Structure :	Stainless Steel 304
Hardware :	Stainless Steel
Welding certification :	Steel / Stainless Steel : CSA W59.18 / CSA W47.1 and AWS D1.6

RESTRICTIONS

This equipment is to be used only with products approved by Innova Public Utility Products Inc.

This equipment must always be operated on a level surface.

Ensure that all hardwares and connecting pins are properly installed before use.

In the occurence of a fall or that the safety of the equipment is in doubt, the equipment must be immediately removed from service and inspected by qualified personnel before reuse.

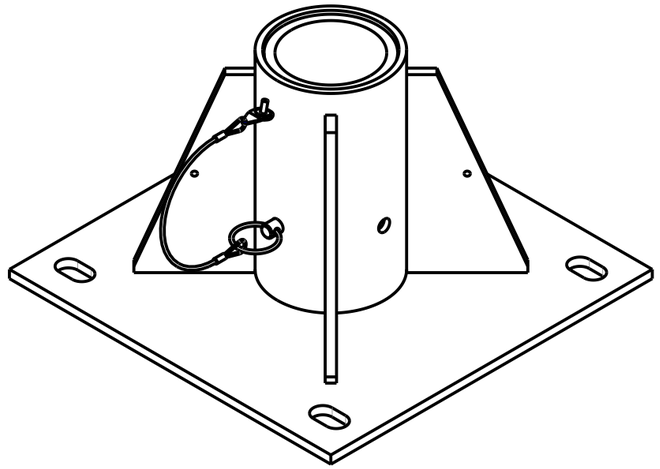

PAT.NO.:

INGÉNIEUR · ENGINEER
Michael Parker
2023-12-21
102051
QUÉBEC

PRODUITS DE SERVICE PUBLICS INNOVA INC.
INNOVA PUBLIC UTILITY PRODUCTS INC.

© 9105-0732 QUEBEC INC. and under exclusive license to INNOVA PUBLIC UTILITY PRODUCTS INC., (hereafter « INNOVA »). All rights reserved. Protected under the Copyright Act of Canada and international treaties and agreements regarding copyrights. Violators are subject to prosecution and other legal recourses for infringement. Any reproduction, adaptation or other use or disclosure whatsoever, in totality or in part, and in any form or by any means whatsoever, strictly forbidden and requires the prior written approval of INNOVA. All data is the exclusive property of 9105-0732 QUEBEC INC. and under exclusive license to INNOVA and cannot be used nor disclosed in any way either without the prior written approval of INNOVA».

WEIGHT:
45.0 Lb
20.4 Kg

TITLE:
Floor Adapter for Universal Anchor Post

COLOR:	Material:	SHEET(S):	PROJET:	Rev.
	SS 304	4 / 5	IN-2570	04

Product number: IN-2570

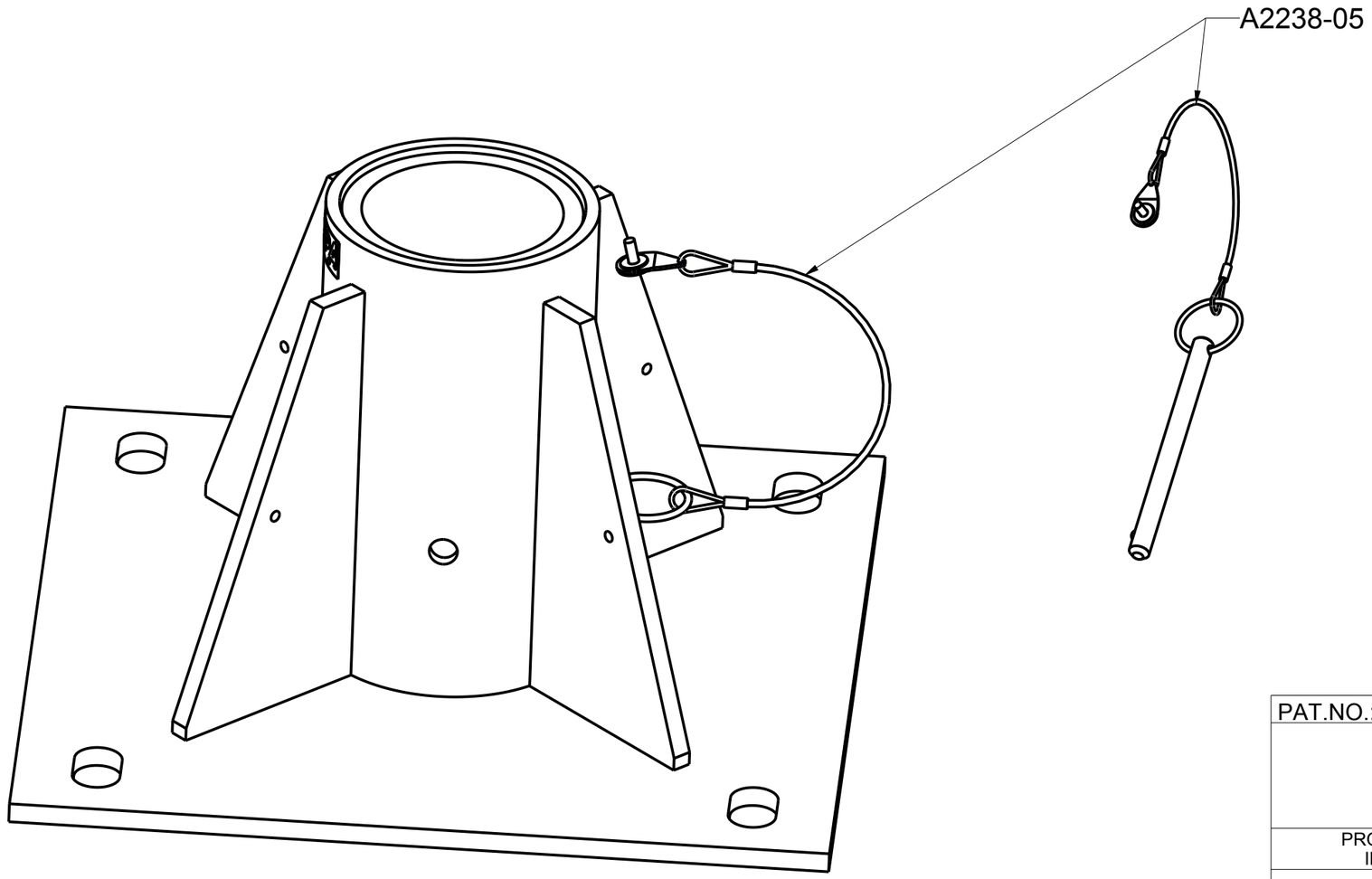

PAT.NO.:

INGÉNIEUR · ENGINEER
Michael Parker
2023-12-21
102051
QUÉBEC

PRODUITS DE SERVICE PUBLICS INNOVA INC.
INNOVA PUBLIC UTILITY PRODUCTS INC.

© 9105-0732 QUEBEC INC. and under exclusive license to INNOVA PUBLIC UTILITY PRODUCTS INC., (hereafter « INNOVA »). All rights reserved. Protected under the Copyright Act of Canada and international treaties and agreements regarding copyrights. Violators are subject to prosecution and other legal recourses for infringement. Any reproduction, adaptation or other use or disclosure whatsoever, in totality or in part, and in any form or by any means whatsoever, strictly forbidden and requires the prior written approval of INNOVA. All data is the exclusive property of 9105-0732 QUEBEC INC. and under exclusive license to INNOVA and cannot be used nor disclosed in any way either without the prior written approval of INNOVA».

WEIGHT:

45.0 Lb

20.4 Kg

TITLE:

Floor Adapter for Universal Anchor Post

COLOR:	Material:	SHEET(S):	PROJET:	Rev.
	SS 304	5 / 5	IN-2570	04